FAIRMONT CHATEAU WHISTLER RESORT • BRITISH COLUMBIA, CANADA
JANUARY 25 – 27, 2026 • #ICSC

2025 EXHIBITING DISPLAY RULES & REGULATIONS

1. No hanging signs or balloons arepermitted.
2. All exhibit displays must be ground supported.
3. All exhibitors:
   a. Are required to complete the Exhibit Design Submission Form.
   b. Are required to submit (or have their display house submit) a scaled PDF rendering of their booth design. Renderings must include a front and overhead scale view and must identify complete dimensions, including the height of all display structures.
   c. The Exhibit Design Submission Form and renderings must be submitted to Kyle Tomlin at ktomlin@ICSC.com by January 10, 2025.
4. At no time may a company's name or logo be overseen by their neighbor's exhibit space.

IN-LINE BOOTH

In-line booths have only one side exposed to an aisle and are generally arranged in a series along a straight line.

Dimensions

For purposes of consistency and ease of layout and/or reconfiguration, floor plan design in increments of 10′ (3.05m) has become the de facto standard in the United States. In-line booths are usually 10′ (3.05m) x 10′ (3.05m).

Use of Space

Regardless of the number of in-line booths utilized (8′ x 20′, 8′ x 30′, etc.) display materials should be arranged in such a manner so as not to obstruct sight lines of neighboring exhibitors. The maximum height of 8′ is allowed only in the rear half of the booth space, with a 4′ height restriction imposed on all materials in the remaining space forward to the aisle.

NOTE: Standard booth sizes for ICSC@WHISTLER are 10' wide x 8' deep due to space restrictions at the Fairmont Chateau Whistler. Some customized spaces are smaller.

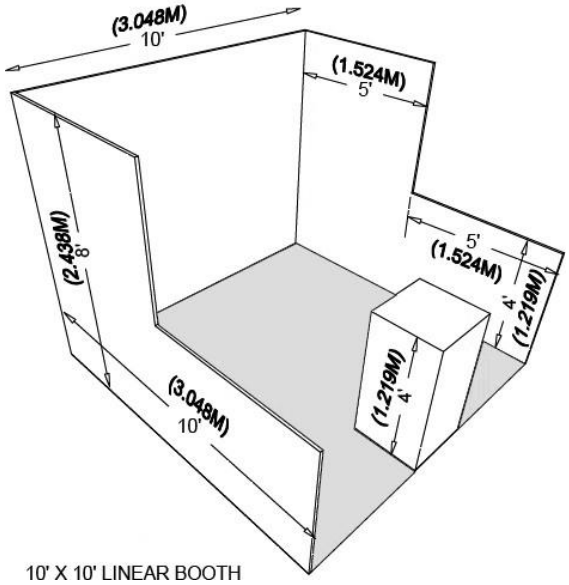

10' X 10' LINEAR BOOTH

CORNER BOOTH

A corner booth is an in-line booth exposed to aisles on two sides.

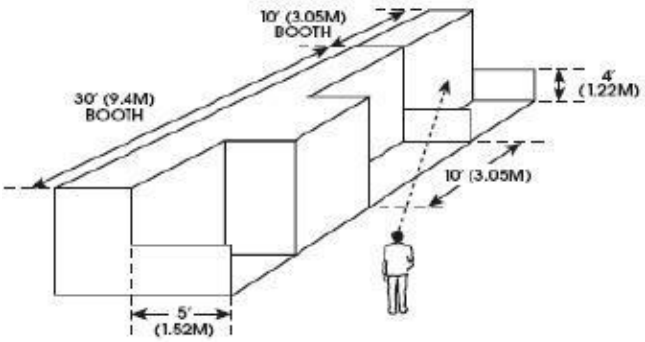

PERIMETER BOOTH

A perimeter booth is an in-line booth that backs to an outside perimeter wall of the exhibit facility rather than to another exhibitor.

Dimensions and Use of Space

All guidelines for in-line booths apply to perimeter booths except that the maximum back wall height is 12′ (3.66m)

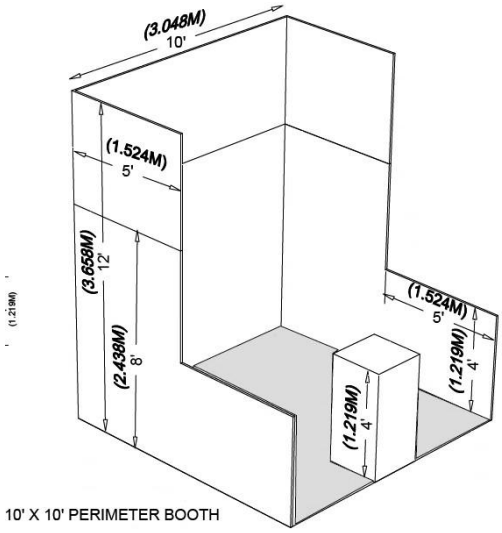

Raised Flooring in Exhibits

Low-rise platform flooring is allowable in standard booths, islands, and peninsula islands for covering utility lines (wiring, cabling, piping etc.), for elevating product displays, and for other purposes. All concealed wiring, etc., must be quickly accessible for emergency service.

Raised floors are limited to a maximum height of six (6) inches (15cm). If people will be on them, raised areas must be non-hazardous and wheelchair accessible. Wheelchair ramps must be at least three (3) feet wide (915mm), with a maximum slope of 1:12; a six-inch rise would require a six-foot run. Ramps should be located every 100 feet around the accessible sides of the exhibit. Landings must be provided at tops and bottoms of ramps and must be at least 36 inches (915mm) wide by 60 inches (1525mm) and free of obstructions. Ramps must be curbed or guarded at their edges and surfaces must be firm and slip-resistant (if carpet used, it must be unpadded, low pile). Edges of raised floors must be ramped or guarded sufficiently to prevent people from tripping or falling at the transitions.

FAIRMONT CHATEAU WHISTLER RESORT • BRITISH COLUMBIA, CANADA
JANUARY 25 – 27, 2026 • #ICSC

EXHIBIT DESIGN SUBMISSION FORM

All exhibit spaces with 400 square feet or more must submit this form along with their booth renderings.

Company Information | Date Submitted

Exhibiting Company Name

Booth Number | Exhibit Size | Total Square Footage

Exhibitor (or appointed EAC) Contact Name | Contact Phone Number

Contact Title | Contact Email Address

Exhibit Structure Information (Please check one)

- ☐ Same exhibit used at ICSC@WHISTLER 2024
- ☐ Modification to Exhibit Structure used at ICSC@WHISTLER 2024
- ☐ New Construction/New Exhibit for 2025

Important Notes and Information

1. All exhibitors:
   a. Are required to complete the Exhibit Design Submission Form.
   b. Are required to submit (or have their display house submit) a scaled PDF rendering of their booth design. Renderings must include a front and overhead scale view and must identify complete dimensions, including the height of all display structures.
   c. **The Exhibit Design Submission Form and renderings are due to Kyle Tomlin ktomlin@ICSC.com on January 10, 2025.**
2. Incomplete submissions will not be reviewed and will be returned.
3. It is the exhibitor's responsibility (or appointed EAC) to thoroughly review the ICSC Display Rules & Regulations.
4. Exhibit designs should be submitted each year only after the exhibitor has received their space confirmation for ICSC to ensure guaranteed space size, location, andorientation.
5. Email submissions only (10MB maximum size). Mailed or faxed submissions will not beaccepted.
6. Booth construction should not begin until an ICSC Exhibit Approval has beenissued.
7. All submissions are reviewed in the order they are received with an average response time of 48 hours from date the Exhibit Design Submission Form and Exhibit Design Renderings arereceived.
8. EAC representing more than one exhibit must submit exhibit designs separately to ensure proper ICSC approval and record for each exhibitor. **Batch Submissions will not be accepted.**