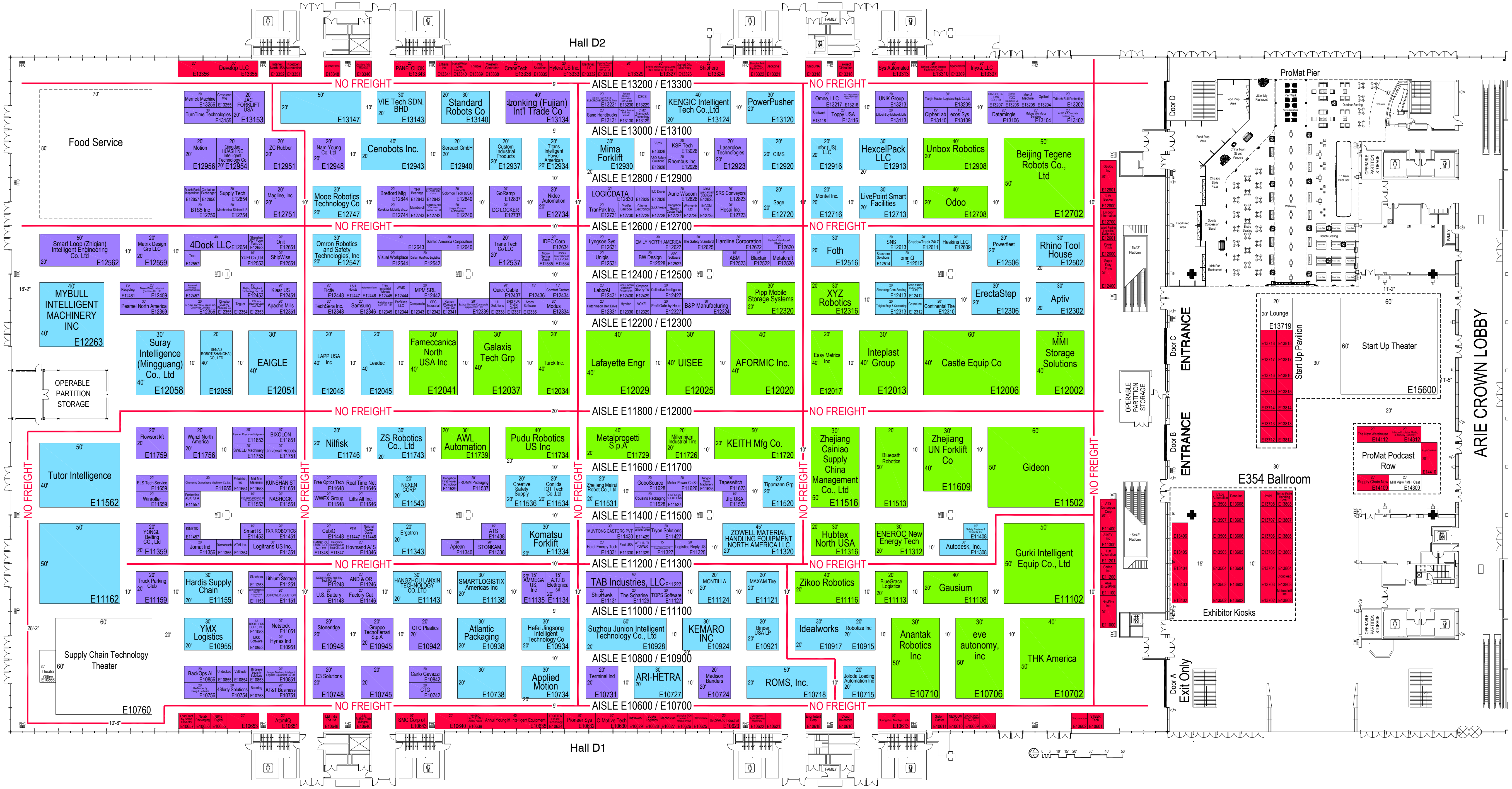

BUILDING LEGEND

HALLS D1, D2 AND BALLROOM/E354 UTILITIES

- ELECTRICAL PORTS
  - A 1 - 208V, THREE, 60AMP; 3 - 120V, SINGLE, 15AMP
  - B 3 - 120V, SINGLE, 15AMP
  - C 1 - 480V, THREE, 100AMP; 3 - 120V, SINGLE, 15AMP
  - D 1 - 480V, THREE, 100AMP; 1 - 208V, THREE, 60AMP; 3 - 120V, SINGLE, 15AMP
  - E 208V, THREE, 30AMP; 120V, SINGLE, 15AMP
- PLUMBING PORTS
  - 1 1" AIR, 1" GAS, 1" WATER, 4" WASTE
  - 2 1" AIR, 1" GAS, 1" WATER, 4" WASTE, 2" STEAM
  - 3 1" WATER, 1" WASTE
  - 4 1" AIR, 1" WATER, 1" WASTE

CEILING HEIGHT IN HALL AND BALLROOM/E354 = 50'

FLOOR LOAD IN HALLS D1 AND D2 IS 400# PER SQ.FT.
FLOOR LOAD IN BALLROOM/E354 IS 250# PER SQ.FT.

- FHC FIRE HOSE CABINET (MUST REMAIN CLEAR)
- FEC FIRE EXTINGUISHER CABINET(MUST REMAIN CLEAR)
- FHR FIRE HOSE RACK (MUST REMAIN CLEAR)
- * INDICATES LAST IN/FIRST OUT

COLUMN LEGEND

COLUMNS ARE ON 150' CENTERS

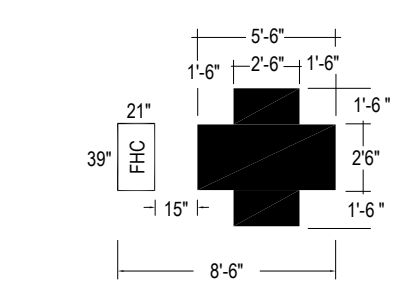

FIRE HOSE CABINETS

FIRE HOSE CABINETS FREESTANDING

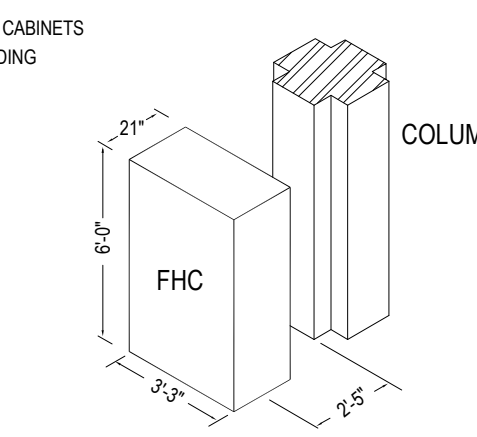

ProMat 2027 Freight Move Out Dates and Timelines

TARGET INFORMATION		MOVE-IN INFORMATION		
Target Color	Date and Time	Marshalling Yard Carrier Check-In	Freight Packed and Labeled MHA Turned In Time	Exhibitor Materials Clear
Red	4/21/27 5:00pm	4/21/27 12:00pm - 8:00 pm	4/21/27 8:00pm	4/21/27 10:00pm
Purple	4/22/27 8:00am	4/22/27 6:00am - 2:00 pm	4/22/27 2:00pm	4/22/27 6:00pm
Blue	4/23/27 8:00am	4/23/27 6:00am - 2:00 pm	4/23/27 2:00pm	4/23/27 6:00pm
Green	4/24/27 8:00am	4/24/27 6:00am - 2:00 pm	4/24/27 2:00pm	4/24/27 6:00pm

*MHA stands for Material Handling Agreement.
These are available to fill out at the GES Service Desk during Move Out.

ProMat 2027

April 19 - 22, 2027

McCormick Place Lakeside Center, Hall D and E354 Ballroom

EVERY EFFORT HAS BEEN MADE TO INSURE THE ACCURACY OF ALL INFORMATION CONTAINED ON THIS FLOOR PLAN. HOWEVER, NO WARRANTIES, EITHER EXPRESSED OR IMPLIED, ARE MADE WITH RESPECT TO THIS FLOOR PLAN. IF THE LOCATION OF BUILDING COLUMNS, UTILITIES, OR OTHER ARCHITECTURAL COMPONENTS OF THE FACILITY IS A CONSIDERATION IN THE CONSTRUCTION OR USAGE OF AN EXHIBIT, IT IS THE SOLE RESPONSIBILITY OF THE EXHIBITOR TO PHYSICALLY INSPECT THE FACILITY TO VERIFY ALL DIMENSIONS AND LOCATIONS.

COPYRIGHT © BY GLOBAL EXPERIENCE SPECIALISTS, ALL RIGHTS RESERVED. NO PART OF THIS PUBLICATION MAY BE REPRODUCED, STORED IN ANY RETRIEVAL SYSTEM, OR TRANSMITTED IN ANY FORM OR BY ANY MEANS - ELECTRONIC, MECHANICAL, PHOTOCOPYING, RECORDING, OR OTHERWISE - WITHOUT EXPRESS WRITTEN CONSENT OF GLOBAL EXPERIENCE SPECIALISTS.

GES

File: promat-2704-mccorm-d.dwg
Plotted: Nov 06, 2026
By: PIZZAL